Attention

1. Turn on the power and make sure it won't surpass the electric current.
2. Make sure to fix leakage protection device, and the socket must be connected with earth line.
3. Please don't block the water recycle nozzle by any part of your body, if that occurs, turn off the pump or power at once
4. A switch for the supply of the hot /cool water must be installed,when stop to use this product the water supply switch and the power source switch should be turned off.
5. Check the water level if it is 10-20mm above the spray nozzle before you start the pump or the pump could be damaged.
6. Don't use corrosive detergent to clean the bathtub, you could use common daily detergent or toothpaste to clean it.
7. Dispose of the product according to the local law when it is out of use.
8. Please contact the local dealer for help if you have any problem.

- No advanced advice will be submit before we change our design and size.
- The pictures may be a little different from the real products.
- Our company keep the final explanation right.

Do not dispose this product as unsorted municipal waste. Collection of such waste separately for special treatment is necessary.

Install Manual

Model : WS-0503

Massage Bathtub

Installation

1. Adjust the feet-screw to make the bathtub horizontal.
2. Connect the drainpipe to the cloaca.
3. Fix shower head and pillow.
4. Connect to the cool(blue) and hot(red) water pipe.
5. Connect to power source, then fill water to have a test.

Parameter

Voltage: 220V-240V 50Hz /60Hz
Power: 1HP
Hydraulic pressure : 0.1～0.2Mpa
Size: 1500x1500x680mm/1800x1800x680mm

Operation

1. Fill water

Turn the cool/hot switch to adjust the water temperature, turn the shift switch to fill water through shower head or faucet or waterfall. Stop to fill water when the water level is 10-20mm above the water jet.

2. Hydraulic massage

Press the pump switch to start the pump and bubble pump,then there will be bubble come out from the air bubble jets and turn the air regulator to adjust the hydraulic power. Push the jet to change the water spray direction. Press the switch again to turn off the pump.

3. Shower

Turn the cool/hot water switch to get suitable temperature, then turn the shift switch to use shower head to take a shower.

4. Power off

Press the pump switch to turn off the pump, then turn the drain switch to let out the water,when stop use ,turn off the power source switch and the water supply switch.

Sketch

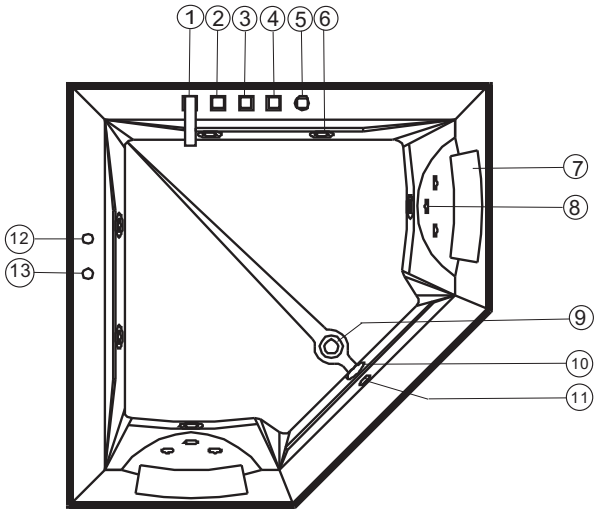

1.tap
2.cold water switch
3.shift switch
4.hot water switch
5.shower
6.big nozzle
7.pillow
8.small nozzle
9.drainage
10.water inlet
11.drainage switch
12.water pump switch
13.air conditioning

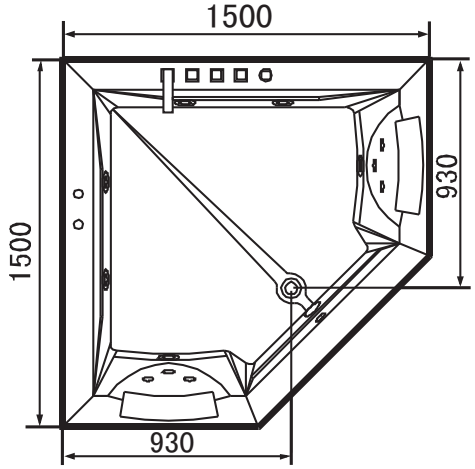

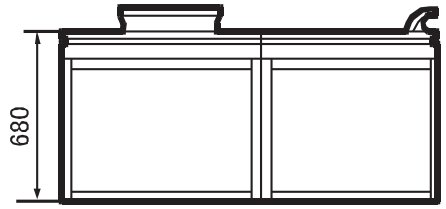

wood panel
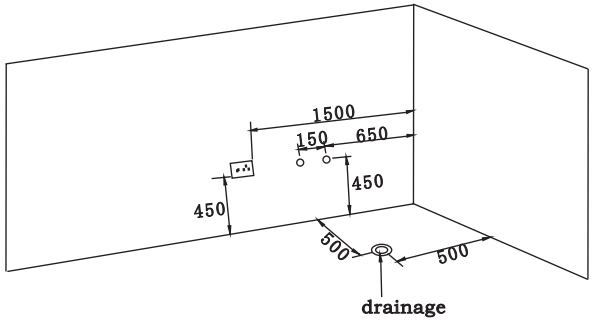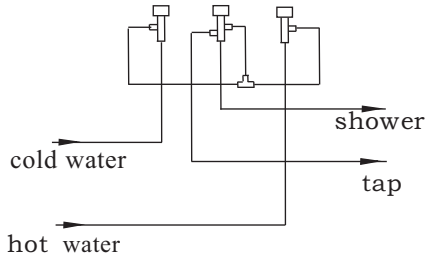
board panel